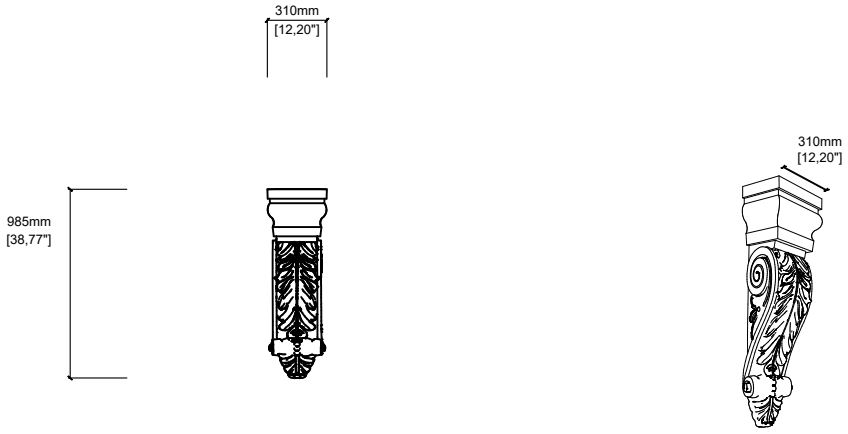

SCALE: 1/10

Polipiyer
Baskent Organize Sanayi Bölgesi
Recep Tayyip Erdogan Bulvari No : 11
Malıkoy - Sincan / ANKARA
+903126401293

MODEL NO : PA 098 - 001
DESIGNED BY : POLİPİYER
DIMENSIONS : 310 X 180 X 985

MATERIAL : POLYURETHANE
DENSITY : 90 - 120

All information in this document is Polipiyer's exclusive property.
Further legal information can be found at https://www.polipiyer.com.tr
All dimensions are in milimeters and inches, Scale 1:1, Lenght 2440 mm.